1 HANG THE FURNITURE ON THE WALL

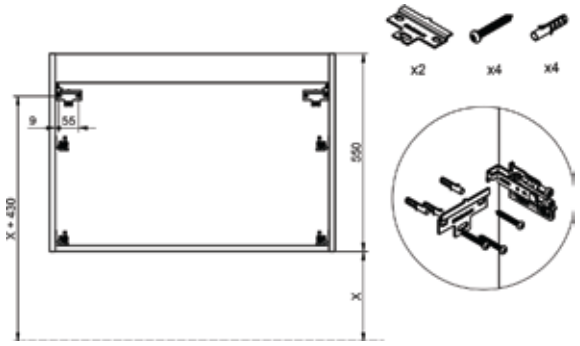

2 LEVEL THE FURNITURE BY ADJUSTING THE HANGERS IF NECESSARY

Level the furniture after installation on the wall

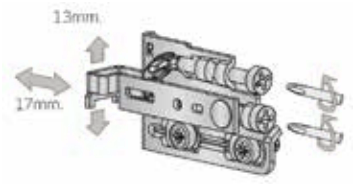



3 DRAWER ADJUSTMENT (FULL AND PARTIAL EXTENSION)

1. UNSCREW THE DRAWER GUIDE
2. ADJUST THE DRAWER HEIGHT
3. TIGHTEN THE SCREWS AGAIN

